Rapport de synthèse de l'Institut d'archéologie de la Nouvelle-Calédonie et du Pacifique

# Looking for the basis of Nan Madol's platforms: coring and test-pit excavations in some channels and structures of Pohnpei's World Heritage Property (Federated States of Micronesia) (23rd January-3rd February 2018)

**SAND, Christophe**
**LEBEHN, Jason**
**SILBANUZ, Semens**
**WALTER, Peter Salapat**
**BARNABAS, Jason**
**HEBEL, Motoichi**

**Nouméa – Mars 2018**

# Looking for the basis of Nan Madol's platforms: coring and test-pit excavations in some channels and structures of Pohnpei's World Heritage Property (Federated States of Micronesia) (23rd January-3rd February 2018)

The Island of Pohnpei in the Federated States of Micronesia (fig. 1) is home to one of the most spectacular archaeological sites of the Pacific: the abandoned city of Nan Madol, built on the edge of the eastern lagoon facing Madolenihmw Harbor (fig. 2). Oral traditions relate the construction of the up to 130 platforms (Hambruch 1936; McCoy et al. 2015; Kataoka et al. 2017) that compose the roughly 65 hectares of spatial extent of Nan Madol, to the Saudeleur dynasty, who ruled Pohnpei and adjacent Islands between the Xth and the early XVIIth century. When the ruins where first mentioned by Europeans in the early XIXth century, it was evident that the site had been abandoned since a long time, giving credit to the oral traditions as well as the numerous archaeological studies that identify the absence of late occupation.

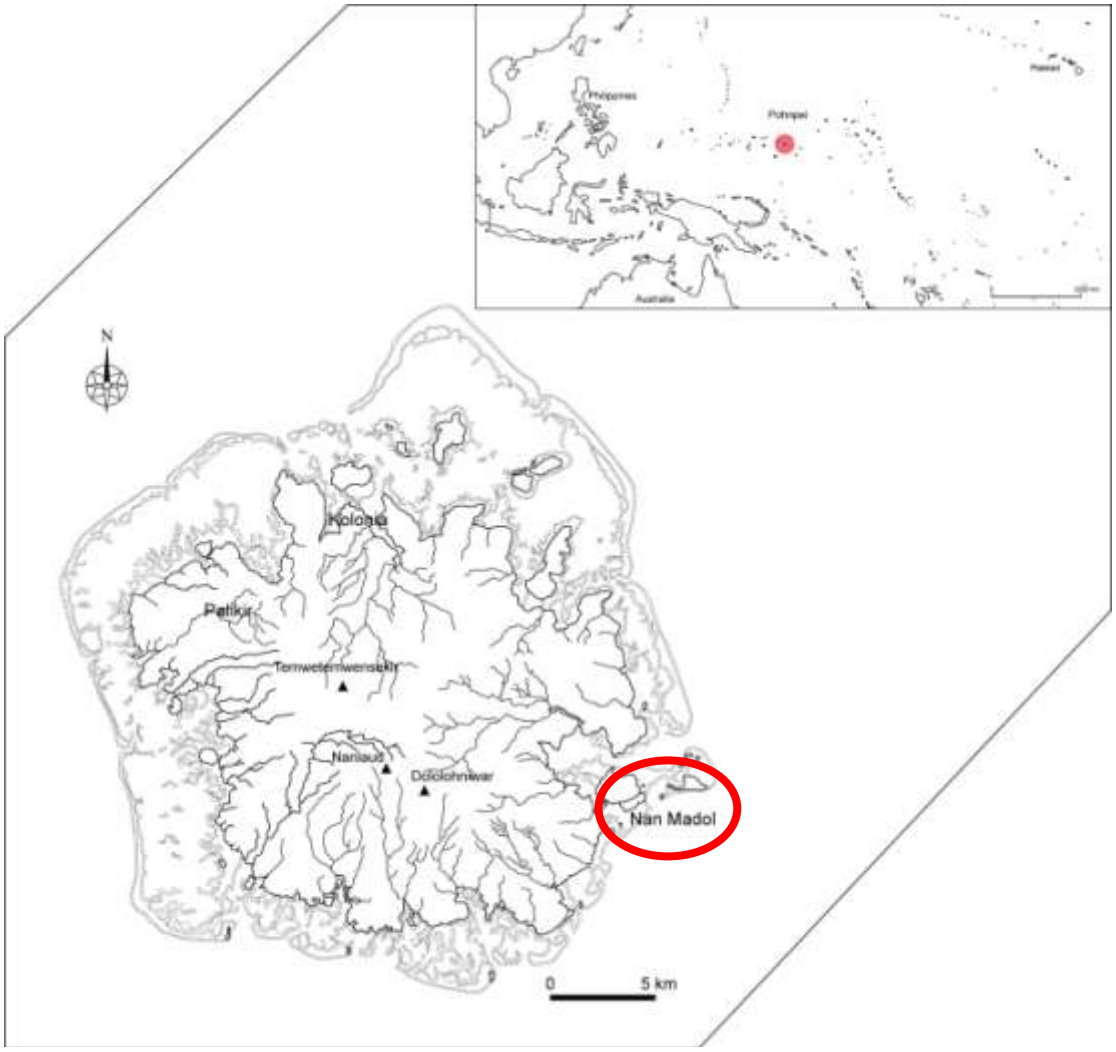


Figure 1. Location of Pohnpei in the Western Pacific and of Nan Madol on the east coast of Pohnpei Island.

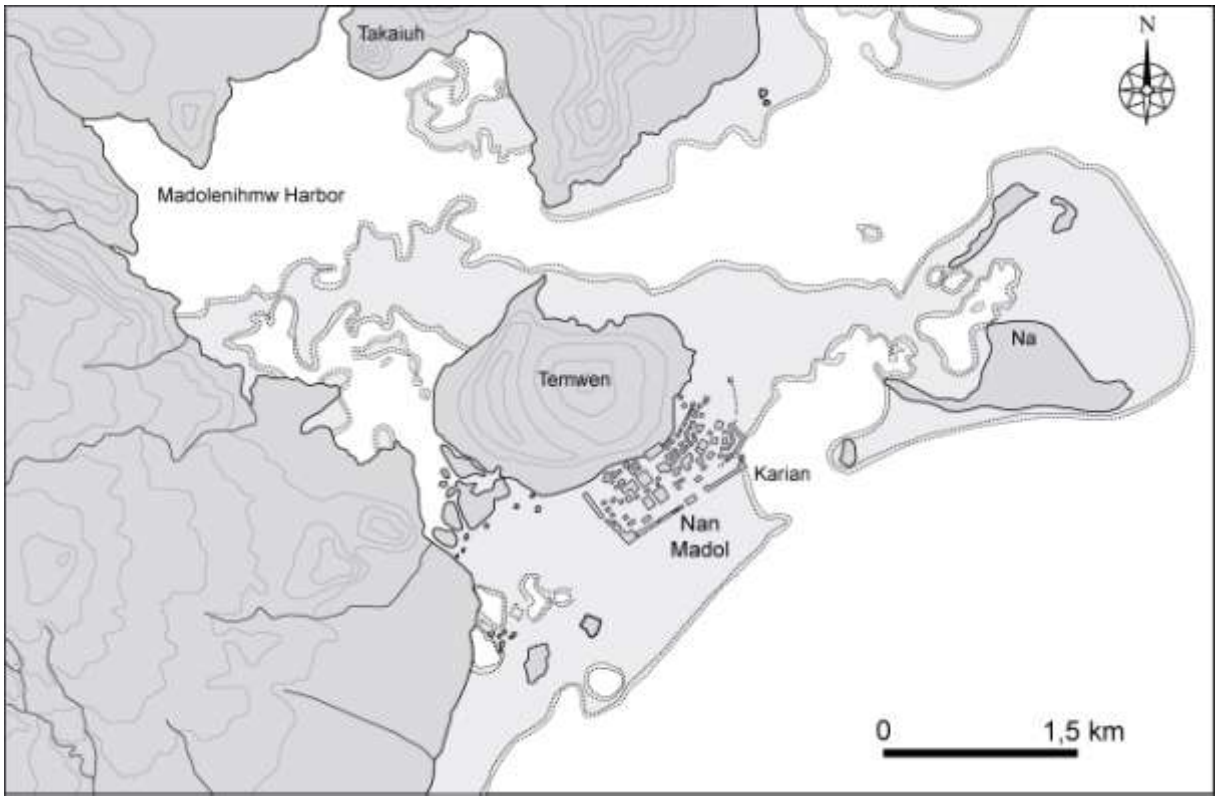


Figure 2. Location of the site of Nan Madol on the eastern side of Pohnpei, along the Island of Temwen facing the large reef pass of Madolenihmw Harbor.

Figure 3. Areal photograph of Nan Madol at the south-eastern boundary of Temwen Island, showing the overgrowth of the channels at the end of the 1990s and some of the square raised platforms. Vegetation cover has significantly increased over the last 20 years.

The inscription of the megalithic complex of Nan Madol on the World heritage List in 2016 was agreed by UNESCO with the commitment of the Federated States of Micronesia to start a long-term conservation strategy, allowing the property to be removed from the list of the World Heritage sites in danger. The World Heritage Center (WHC) has identified a number of corrective measures that need to be implemented, mainly the removal of vegetation that threaten the preservation of the ruins (fig. 3), the cleaning of channels to prevent further silting of the site and facilitate visitor's access, and a management plan.

The old city of Nan Madol has received much attention since over a century by explorers and archaeologists. Since the 1980s, the teams working on the site have regularly expressed concerns on the long-term preservation of the ruins and proposed different ways to help retain the authenticity of the structures (Saxe 1980; Ayres et al. 1983, 2008, 2015). As part of the preparation of a *draft Conservation Plan* for the site for the State Party, it has appeared that some central questions associated to the corrective measures identified by the WHC, especially those related to the channels' fill, needed further study, as these had been only a side-topic of previous research. This report presents the main results of a 6 days program fulfilled between end January and early February 2018 in different parts of Nan Madol to gain information on this topic.

# I. The main questions addressed

Nan Madol has been built on the lagoon side of the Island of Temwen, located off the east coast of Pohnpei. The former city in about 1300m long (in a south-west/north-east axis) and 500m wide (in a north-west/south-east axis). Dating appear to show that the different artificial platforms that compose the old setting were built from the shore outwards, the oldest fills having being made just off the south-east shore of Temwen around 1000 AD, the large platforms located in the central part of the site being dated to about 1200 AD (cf. Nagaoka 2017 for a summary). Today most of the channels that connected the platforms and allowed circulation inside the protective walls of Nan Madol are completely silted at low tide by mud or sand. Only part of the main channel and those used by fishermen to exit the site reach a reasonable depth.

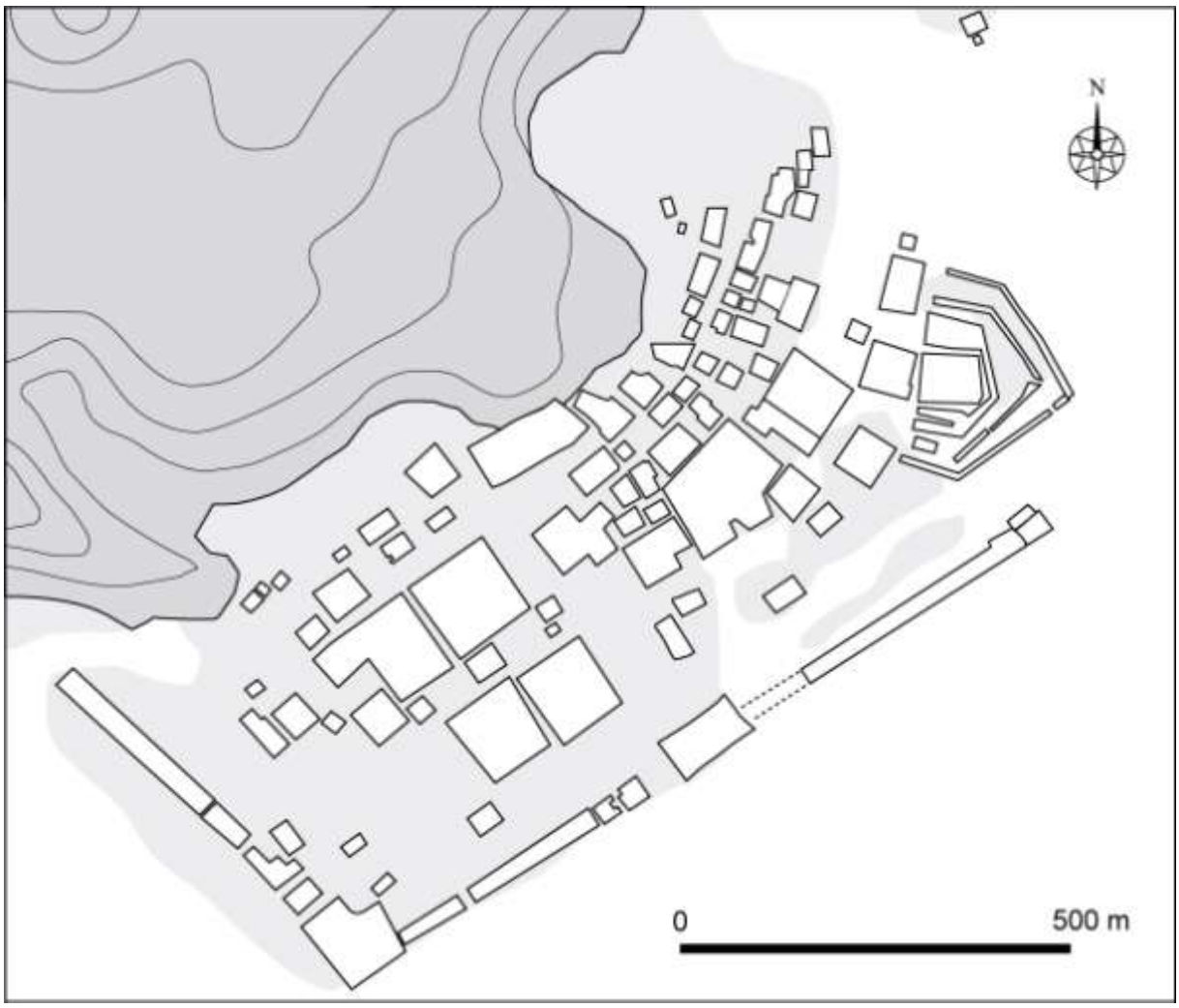


Figure 4. Map of Nan Madol and extent of the present vegetation cover (from the original map in Kataoka et al. 2017, fig. 4).

The demand of the WHC to dredge some of the channels has imposed to address the question of the natural and anthropogenic processes involved in the silting of these channels. The perspective of the removal of soil possibly enclosing archaeological remains, has also

urged to get a better understanding of the type of fill present in these channels. Finally, the overall question of the depth of the original channels - and though the total height of the platforms resting on the original coral/sandy bed - needed to be addressed. In the short field-period available, the team focused on obtaining archaeological results that might help answering some of the questions listed above. For this, a set of 5 cores and 7 test-pit excavations of different sizes were fulfilled in selected areas. The archaeological work was challenging as it was mainly done in the water and constrained by tide fluctuation. Furthermore, nothing was previously known of the nature of the fill. Without specific equipment/retaining panels to prevent water flow and without a pump (which would have necessitated power) for this first stage of study, we focused on a few locations, selected for their potential to allow to maximize information-gathering. After having presented some insight on the historical data about the channel's fills, the report presents in a first part the main results obtained, allowing in the second part to discuss on more solid grounds some of the questions addressed, by including the few other data available on this topic published in the literature.

# II. Short background to Nan Madol's channels fill

As part of our goal to get a better understanding of the build-up of the fill in Nan Madol's channels, we have looked for indications of the ways visitors describe these waterways and their navigability in written texts about the site since the 19th century. One of the earliest descriptions, made by Johann Kubary – a Polish adventurer and item collector working for German Museums - in his 1874 paper, highlights that "the height of the stone islands is such (…), that at high tide, a canoe can land easily to disembark passengers; the channels are everywhere of the same depth, nearly dry at low tide, and about 6 feet (one fathom) at high tide" (Kubary 1874: 124, translation C. Sand from the German text). A general guide for the site published nearly one century later in 1956, states that "(a)ny visit to Nan Madol must be made at high tide" (Whiting 1956: 8), and another in 1970 says that "(v)isits to Nan Madol should be made at a relatively high tide, from 3.0' feet up you can reach all the major islets by motorboat. To reach Nan Dawas, a 2.5' foot tide is usually minimal. A low tide is preferable when walking or wading" (Jencks 1970: 2). These texts appear to highlight that since nearly 150 years at least, channels of Nan Madol have been "nearly dry at low tide" to paraphrase Kubary.

Information of the former height of the fill can also be gained from old photographs. The earliest photos used for the present study are from Kubary's collection, stored in Holland[1]. Comparing the 1870s photo of the entrance of Nan Dawas (fig. 5) with the same location today (fig. 6), allows to show that there does not appear to have been a significant change in fill height since the second half of the 19th century.

Figure 5. Photograph of the entrance to Nan Dawas taken at low tide in the early 1870s. Kubary is seen in the forground left (Kubary collection, photograph A32-59).

[1] The photographic collection is today stored at the *Museum Volkenkunde Netherlands* in Holland (http://www.geheugenvannederland.nl).

Figure 6. The same location as figure 5 taken in January 2018
at near low tide (photo C. Sand).

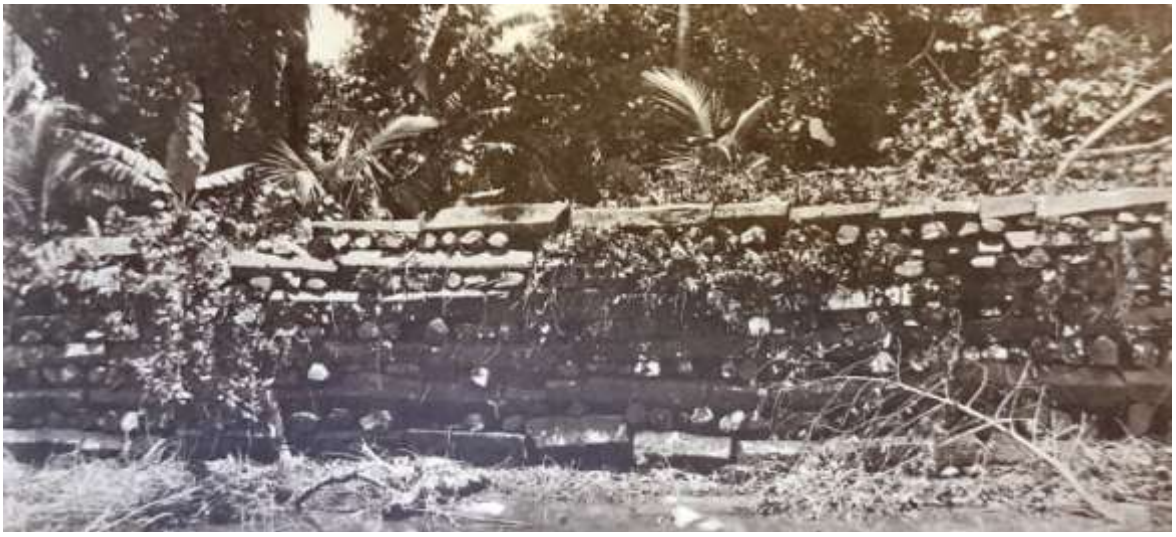

Figure 7. Pankedira's southeastern retaining wall, showing the mud-flat at low tide (in Hambruch 1936).

Photos taken in 1910 by P. Hambruch during the German *Südsee Expedition* show the same general pattern of a near-dry channels when close to low tide (fig. 7). This can also be concluded by looking at informative photographs taken from the top of Nan Dawas's western wall during the 1963 archaeological expedition of B. Meggers and C. Evans to Nan Madol, under the auspices of the Smithsonian Institution[2]. On a picture looking towards the channel between Dau platform (n°111) and Kohnderek platform (n°115) can clearly be identified the presence of white crab-hole mounds on the dry sand, which is covered by dark sea-grass (fig.

[2] A partial copy of this collection, stored at the *Micronesian Archaeological Research Center* (MARC) in Guam, was duplicated in digital form by Pr. John Peterson and kindly forwarded to HPO Pohnpei.

8). A picture looking towards the south-west angle of Nan Dawas, shows someone beside a traditional canoe in the channel, with water only up to his calf (fig. 9). In the main channel of the southern half of Nan Madol facing platforms like Pankedira (n°33), photographs taken at low tide of retaining walls, show clearly the presence of a drying mud sediment (fig. 10).

Figure 8. Photograph showing the western wall of Nan Dawas and the open channel between platforms Dau and Kohnderek at low tide (photograph MC7317, B. Meggers and C. Evans collection 1963, Smithsonian Institution, Washington DC; courtesy J. Peterson).

Figure 9. Photograph of the western wall of Nan Dawas, showing the channel facing Dau platform 111 at low tide (photograph MC7318, B. Meggers and C. Evans collection 1963, Smithsonian Institution, Washington DC; courtesy J. Peterson).

Figure 10. Retaining wall of a platform (possibly Pankedira, n°33) showing overgrowth of mangrove and the drying mud visible at low tide (photograph MC7150, B. Meggers and C. Evans collection 1963, Smithsonian Institution, Washington DC; courtesy J. Peterson).

In conclusion (see Sand 2018), the data summarized here allows though to question the hypothesis that there has been a significant silting of the channels of Nan Madol during the last century, and especially over the 30 years since the bridge from Pohnpei mainland to Tamwen Island was put in place.

# III. The archaeological cores and test-pit excavations

The challenge to retrieve information from wet archaeological fill, all (with one exception) located under the high tide level, as well as the short time-period that was in the end available for this project, prompted in the first stage of the field-program to concentrate on a coring-strategy. The main objective was to get a general understanding of the nature of the stratigraphic fill and to retrieve information on the possible depth of the fill in some of the channels (fig. 11). To reach this goal, a set of 5 cores (labelled excavation EX. 1 to EX. 5) was first done in different parts of the site, using a coring device (auger). We started by the sandy area of the main channel, before moving to the mangrove fill closer to Temwen Island. In a second phase, a total of 7 archaeological test-pits (labeled excavation EX. 6 to EX. 12) where excavated. In this chapter are presented the main results, detailing for each core/pit the stratigraphy identified as well as the archaeological material retrieved.

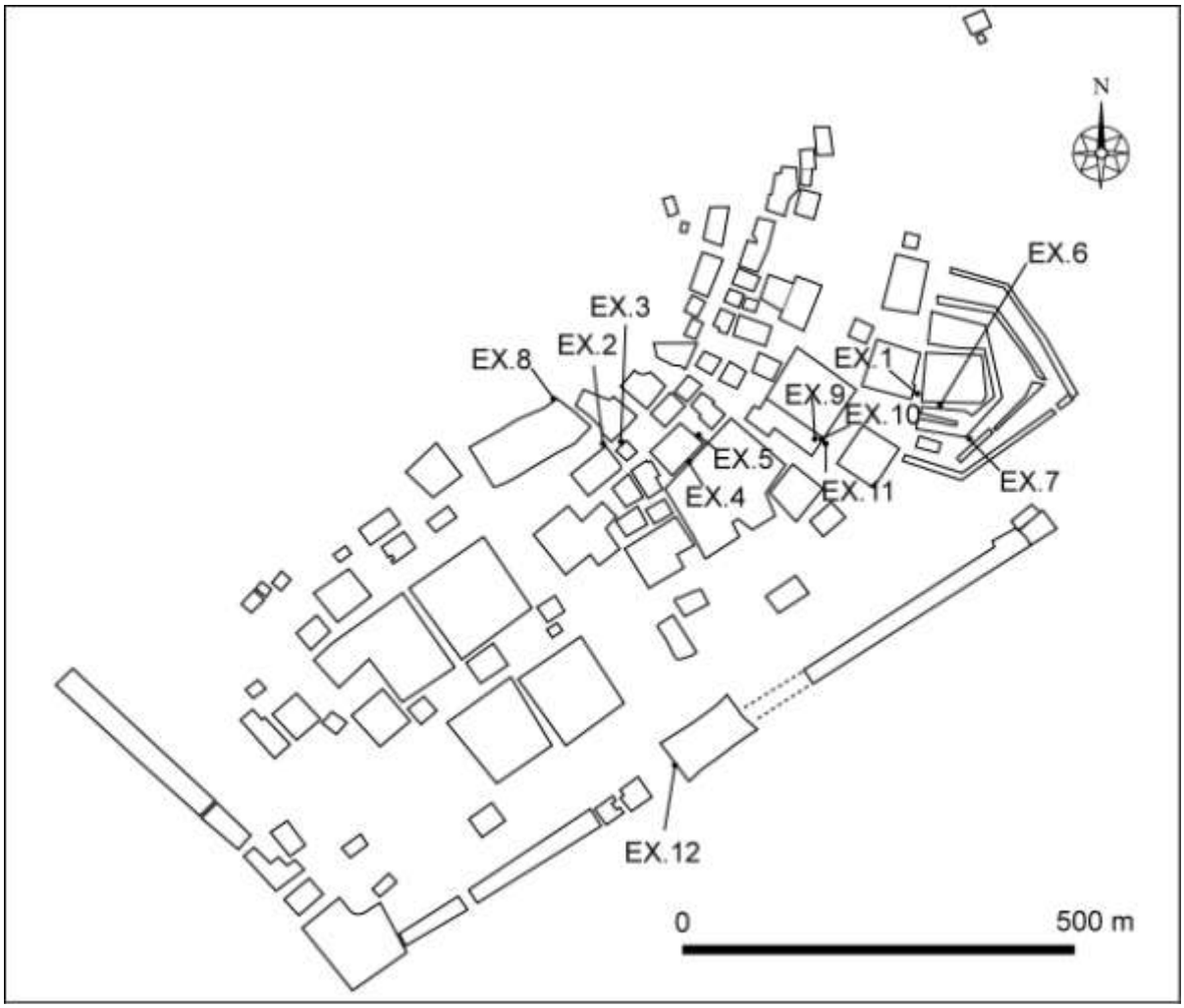


Figure 11. Location of the different excavations (auger and test-pits) fulfilled during the 2018 field mission in Nan Madol.

Excavation 1

Core positioned 3 meters away from the western retaining wall of Nan Dawas (platform 113), on the southern half, about 13m from the last *in-situ* stone visible at the southwest corner (fig. 12). The sandy deposit turned out to be very compact and the coring device had real difficulty being drilled in the sediment. Excavation 6 has shown that the fill is mainly composed of stone/coral pebbles and shells, preventing any use of a coring device. It was though decided to abandon the coring after about 30cm.

Figure 12. Jason Lebehn starting the coring in front of Nan Dawas (EX. 1).

Excavation 2

Core positioned about 4 meters away from the south-western wall of platform 57 (Peidoh), near the southern limit of the collapsed retaining wall. The following stratigraphy was observed (fig. 13):

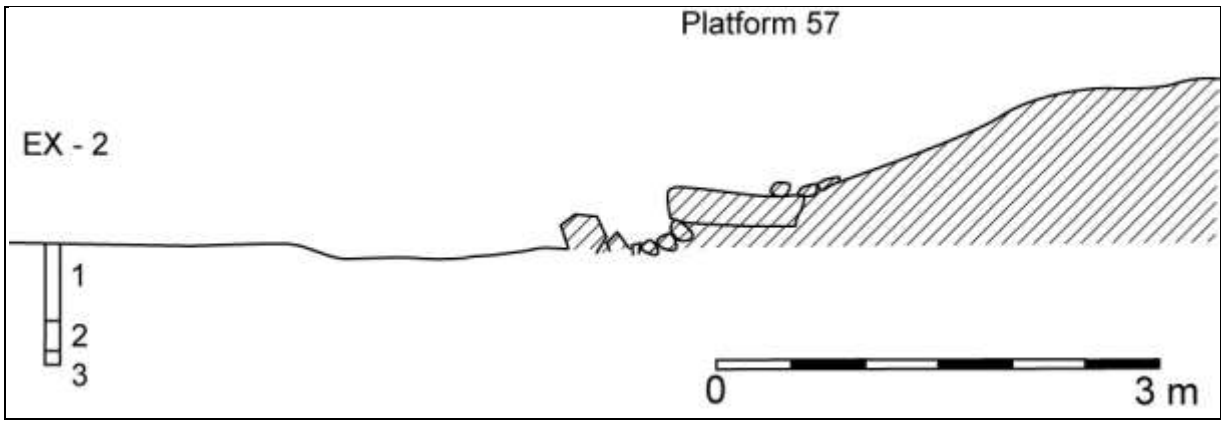


Figure 13. Profile of excavation 2 beside platform 57, with the 3 different stratigraphic levels identified through coring.

- 0-50cm (Level 1). Loose superficial soil of dark brown color with roots.
- 50-75cm (Level 2). Mix of clear brown soil and sand, with a fill of small shells and small stone/coral pebbles.
- 75cm- + (Level 3). Start of a harder gravel layer mixed in brown soil (sample collected). The coring was stopped à 85cm.

Figure 14. Location of excavation 3 beside the modern walkway, looking towards platform 57. The dry mud of the low tide is clearly visible.

Excavation 3

Core positioned in between platforms 57 (Peidoh) and 86 (Sapwenpei), at equal 8 meters distance from each collapsed wall limit, and 60cm from the south-western edge of the present artificial raised causeway allowing tourist access (fig. 14). The following stratigraphy was observed (fig. 15):

- 0-70cm (Level 1). Fairly compact clayish red-brown soil, resulting apparently from the accumulation of decomposing tree leaves (sample collected).
- 70-120cm (Level 2). Loose dark brown soil texture, with no other apparent fill.
- 120-160cm (Level 3). Dark brown soil with small pebbles and some very fragmented shells (sample collected).
- 160-180cm (Level 4). Light brown soil and silt/sand lenses, with fragmented shells (sample collected).
- 180cm-+ (Level 5). Gray sandy fill, with presence of micro-strata, and some shell fragments (sample collected) (see fig. 46). This has tentatively been interpreted as the basis of the original channel. A black sample of possible wood flake has been collected for C14 dating. The core reached 210cm before being stopped.

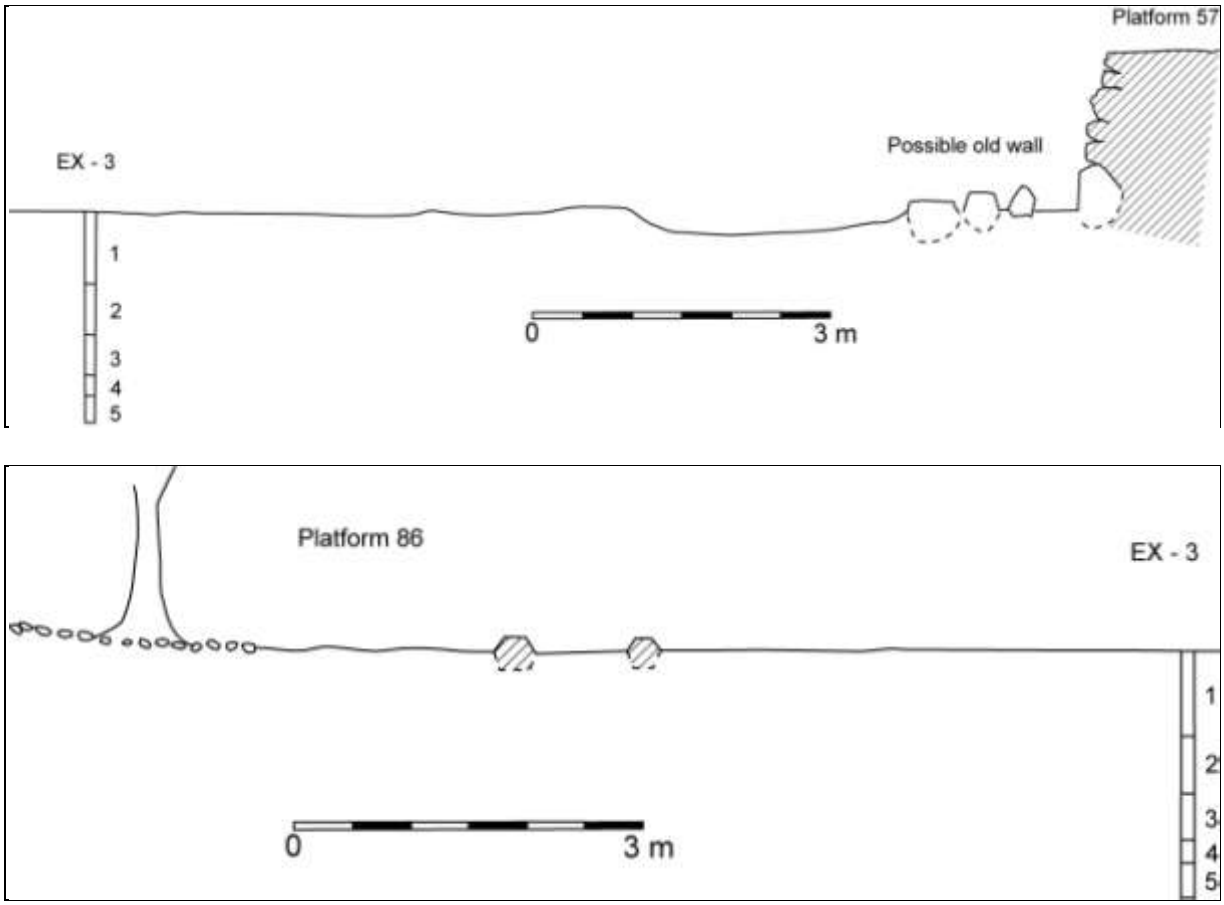


Figure 15. Profile of the deep stratigraphy identified in excavation 3, positioned between platforms 57 and 86.

Excavation 4

Core positioned in the center of the small channel separating platforms 84 (Usenpei) and 99 (Rasalap), about 6 meters from the eastern corner of platform 84 (fig. 16). A series of cores along a 100cm transept were all stopped at about 50cm depth by a stony fill that was impossible to overpass.

Figure 16. The auger stuck on pebbles and rocks, at the beginning of the coring of excavation 4 in the small channel between platforms 84 (right) and 99 (left). Note the mud surface at low tide.

Figure 17. Coring of excavation 5 underway by Motoichi Hebel near platform 84, which reached the depth of 130cm.

Excavation 5

Core positioned about 3 meters from the north-eastern wall of platform 84, nearly 8 meters from its eastern corner, in alignment with the large tree growing on nearby platform 99 (fig. 17). The following stratigraphy was observed (fig. 18):

- 0-5cm (Level 1). Dark brown soil resulting from decomposing leaves.
- 5-40cm (Level 2). Brown sediment with numerous small to medium-sized stone pebbles[3] (sample collected).
- 40-110cm (Level 3). Clear brown soil mixed with sand, filled with shell fragments, small coral and stone pebbles (sample collected).
- 110cm-+ (Level 4). Gray silt/sandy fill with small shell fragments. The excavation was stopped at 130cm deep (sample collected).

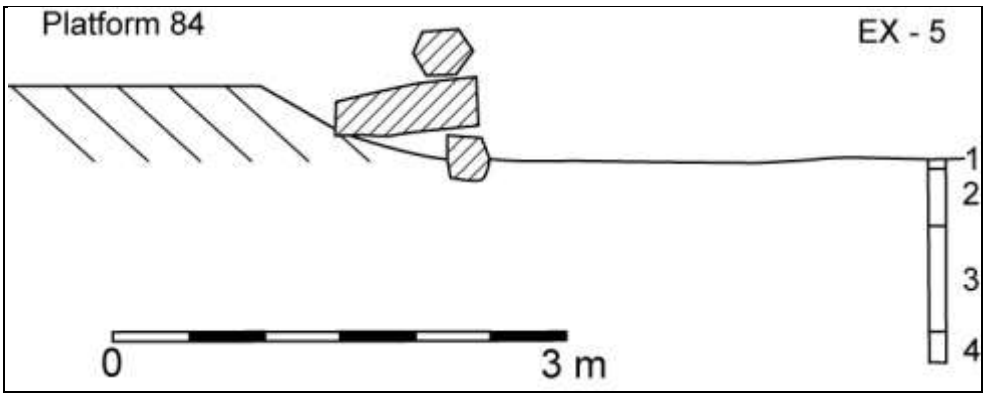


Figure 18. Profile of excavation 5 near platform 84.

[3] It must be highlighted that the amount of pebbles in this level led to a twist of the blade of the coring device.

Excavation 6

Excavation positioned along the southern retaining wall of Nan Dawas platform, facing the lateral entrance to the inner compound enclosing the burial chambers. The choice of the location was directly linked to the unique building layout present for this part of the wall, with the positioning of the trapezoidal stones in a vertical position (fig. 19). Mapping of this portion of the retaining wall counted a total of 20 vertical facing slabs (fig. 20). On its south-eastern corner, a new row of vertical stones facing east can be identified at 90° angle, possibly marking the start of a buried retaining wall going towards the south outer wall of Nan Dawas.

Figure 19. The row of vertical stones in front of the entrance door in the southern wall of Nan Dawas.

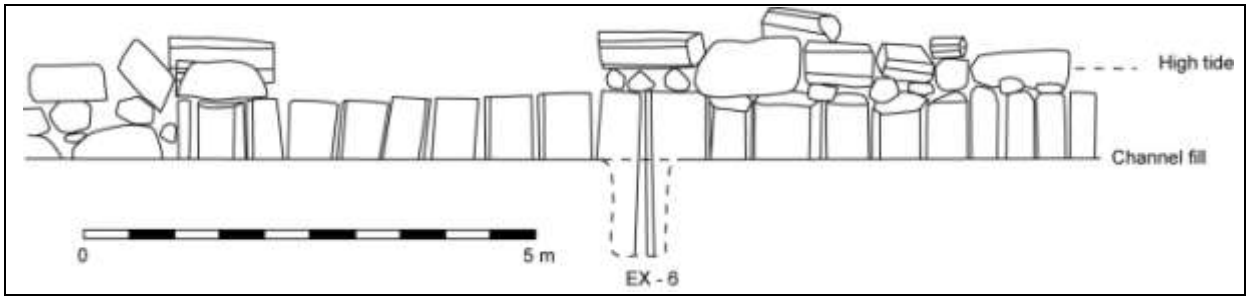


Figure 20. Profile of the section of the southern retaining wall of Nan Dawas characterized by vertical trapezoidal stones. The result of excavation 6 is included in the figure.

The test-pit was located 34m from the south-west corner of the platform, positioned in the only area where two rows of stones top the vertical slabs, possible testimony of minimal erosion. It was hoped that the vertical stones would exceed the length of the retaining wall itself, the basis of the stones having possibly been sealed in the sand to prevent tilting. A number of large stones are present in the mud/sand around the test-pit location. Removal of sediment was done at medium tide, in the water. All sediments were wet-screened through a 5mm mesh (fig. 21). The largest amount of remains was composed of stone and coral pebbles

as well as shells. The main shell species are bivalve (Pinctada, Anadara, Mytilidae), the small number of gastropods being composed mainly of small Lambis and Conus, along with a Terebra sp. fragment. None of these refuse shell-items was collected, as the excavation in the water without proper control of the progressive sliding of sediments downwards from the profile walls, prevented secure identification of provenance. Only bones and archaeological items were put aside.

Figure 21. End of the first day of excavation 6, showing the test-pit filled by the incoming tide and sediments after wet screening.

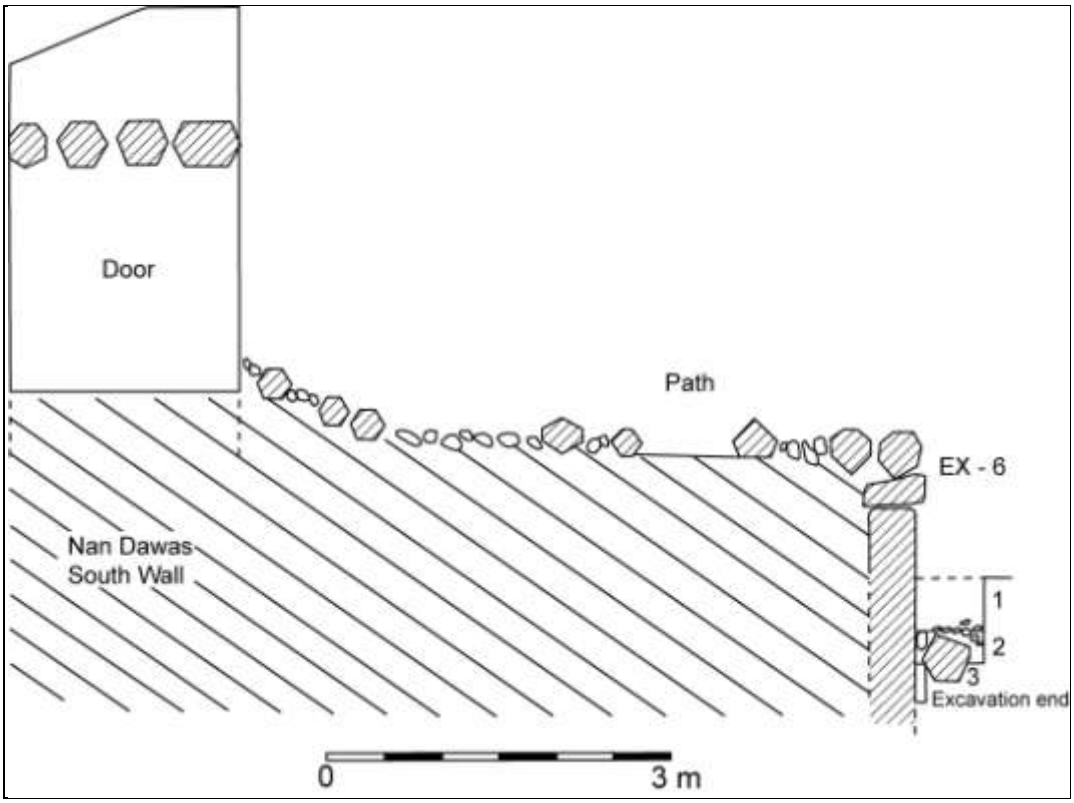


Figure 22. Profile of excavation 6 along the southern retaining wall of Nan Dawas. The outer wall of the burial compound and the collapsed entrance door facing the excavated area have been included in the profile but the detail of each stone has not been drawn due to time constrains.

By observing the sediment screened during the excavation process (fig. 23), it has been possible to infer three main stratigraphic horizons, with height recorded from the top of the fill (fig. 22):

- 0-35cm. Sand with pockets of silt soil (Level 1). Shells are present from the immediate top of the fill, some bivalves (Pinctada) being of large size. The rest of the fill is composed of coral blocs/pebbles and of stones fragmented by burning, some up to flake size, as well as archaeological items detailed below. The only modern object present was a blue color plastic rope fragment. Although this has been constantly looked for, no glass fragment has been retrieved from the sieve.
- 35-55cm. Same general sediment fill of sand and silt soil, but with an increase of coral and stone pebbles. Of notice is the presence of a whitish rust on the majority of the pebbles, possibly indicating a long stay in the water.
- 55-80cm. At 55cm depth, the excavation identified in contact with the vertical blocs, what was first thought to be a row of rounded coral boulders running parallel to the retaining wall, but which turned out to be only part of the fill. Outwards from the wall, at about 10cm distance, a polygonal slab positioned parallel to the wall is present. The column is about 45cm thick. The fill of this horizon is more sandy (Level 2), with a larger concentration of stone pebbles and coral pebbles/slabs, possibly indicating a difference in fill process compared to the upper horizons. Shells are present in quantity, as well as some stones. A possible charcoal was identified in the fill recovered at 80cm deep and was collected. It has not been possible to confirm if the horizontal slab is a purposeful arrangement to create a step or is just a fallen rock from the upper part of the wall setting.
- 80-105cm. The space between the vertical stones and the horizontal slab has been excavated to a depth of 105cm. The sediment is composed of a coarse sand fill (Level 3), enclosing only some stone and coral pebbles, a larger quantity of shells as well as some archaeological material (fish bone). The bottom of the vertical slabs was not reached.

Figure 23. Test-pit of excavation 6 partly filled with water at low tide, showing the numerous shells and stone pebbles present in the sand matrix.

| Depth | European item | Archaeol. items | Fish bones | Mammal bones | Shells | Stones |
|---|---|---|---|---|---|---|
| 0-35cm | X | X | X | X | X | X |
| 35-55cm | | X | X | X | X | X |
| 55-80cm | | X | X | X | X | X |
| 80-100cm | | X | X | | X | X |

Table 1. Main types of archaeological items uncovered in the artificial spits of excavation 6.

Figure 24. Dog yaw and teeth as well as fish bones and artifacts from the 35-55cm spit of excavation 6.

Table 1 presents the main types of archaeological items retrieved by the wet sieving of the sediments (fig. 24), the photographic inventory of the material being grouped in appendix I. Aside from the shells and the burnt stone pebbles already mentioned, fish bones were present in each spit, some being of significant size. A number of dog bones, especially fragments of yaw and teeth, were also recovered. In layer 1 was discovered a broken fragment of a Tridacna adze (fig. 25). A worked piece of oyster shell (possibly Pinctada) appears more like a shell-money fragment of the type know in Western Micronesia than a lure (fig. 25). At 50cm deep was recovered a small drilled shell-disk (fig. 26). A possible polished coral file and a reworked oyster shell (knife?) were also identified (fig. 26). The only stone item that was recovered is a polished rounded pebble about 6.5cm in diameter, heavy for its size, possibly used as a hammer-stone (fig. E in appendix I).

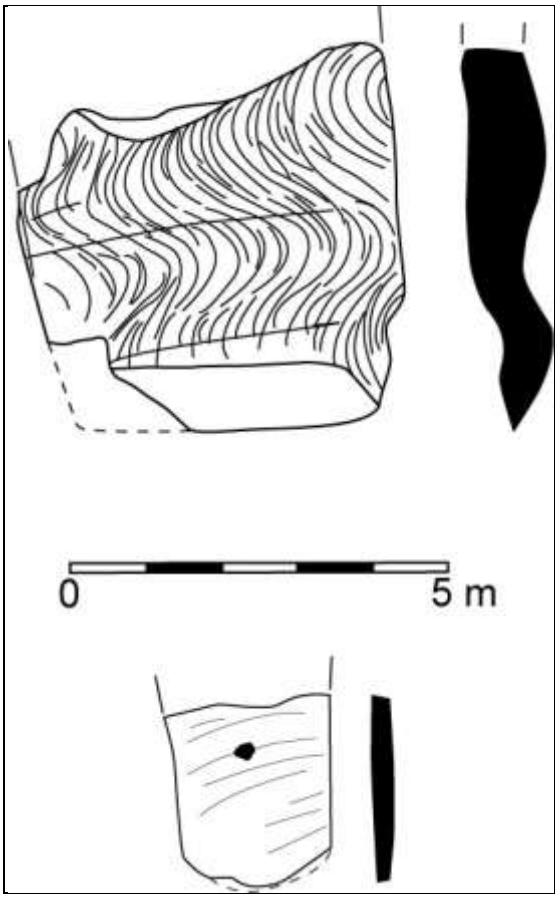


Figure 25. Broken Tridacna adze fragment (up) and possible shell-money fragment from spit 0-35cm of excavation 6.

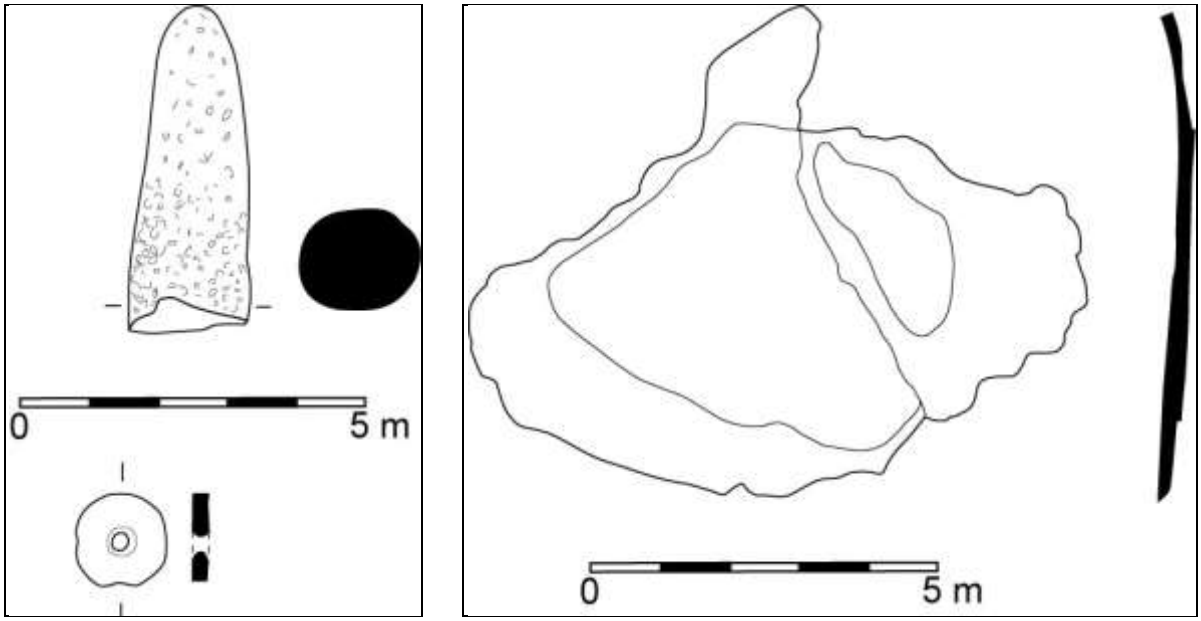


Figure 26. Possible coral file (top left), drilled shell bead (low left) and possible oyster shell knife (right) from excavation 6.

It can be concluded from this test-pit excavation that the fill of the channels is probably mainly composed of archaeological material. No modern horizon has been identified during the excavation and no presence of historic European items like glass and iron has been identified. Some movement of material might have occurred due to crab coring (as can be observed on the surface at low tide) and mangrove root growth, but the extreme toughness of the fill, with the large presence of stone/coral pebbles, must have prevented significant mix of items. The basis of the fill has not been reached, mainly due to incoming tide stand while the excavation was on-going, but it can be assessed that the basis of the retaining walls of this part of Nan Dawas are at least 105cm under the top of the present-day fill. It would be expected that the basis of the vertical slabs would have been buried in the original sand surface during construction of the retaining wall, to prevent tilting of the stones due to the pressure of the fill. Accordingly, it would be logical to expect that the depth of these stones does not account for the total thickness of the channels' fill.

Figure 27. Cleaning of the mangrove overgrowth before the opening of excavation 7 along the south-eastern wall of platform 110.

Excavation 7

This excavation was positioned at the south-eastern corner of platform 110 and 20m from the eastern corner making the end of that platform along the channel leading into the Nan Dawas area. The test-pit was positioned at the basis of the outer wall facing the south-east, along the last large stone of the wall, 330cm long (fig. 27). This area has seen accumulation of sand, creating a beach (under erosion at the time of the dig) along about 10m of the wall face, without preventing the growth of mangrove. The scope of the excavation was to locate the basis of the wall.

At a first stage of the excavation, a 100cm by 100cm test-pit was positioned along the large stone. The fill being only of natural sand, the excavation was made using a shovel. At 20cm deep in the northern corner of the pit, was identified a large stone placed under the massive upper boulder and expanding about 25cm from the vertical profile of the wall. The downward profile of the upper surface towards the southwest had forced the builders to fill the gap between the end of this large bloc and the boulder, using a trapezoidal slab placed in perpendicular position to the wall, positioned between 25cm and 50cm deep. At this level has been reached the water table and the water had to be bailed out with buckets. A second slab of the same form and placed parallel to the first, ends at the western corner of the pit. These two filling blocs rest on the summit of a large stone placed in the same general vertical alignment to the massive boulder (fig. 28).

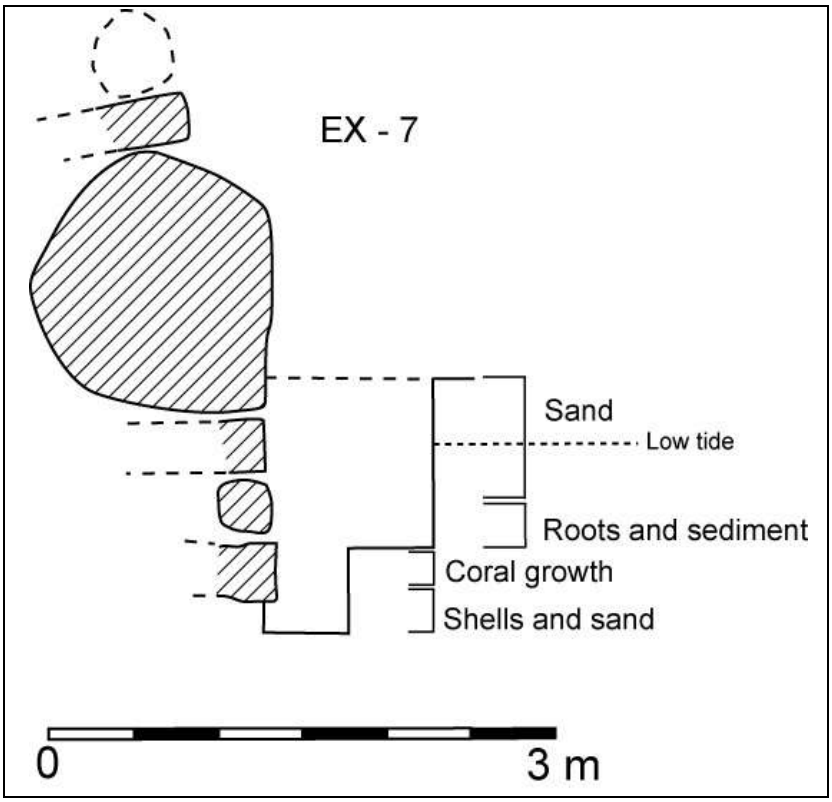


Figure 28. Profile of the filling stones in the central part of excavation 7.

In order to allow the completion of the excavation, the test-pit was expanded to reach the southern corner of the wall, with a profile of 2.75m. This has allowed to identify the presence of a large rock, at least 120cm long, serving as base for the massive surface boulder forming the corner. This rock has probably moved over time (fig. 29), weakening the support of the boulder, which has broken in two (fig. 30). Due to significant root development along the stones, the excavation concentrated on the central part of the test-pit, leading to the excavation of the lowest stone, which appears at 95cm below the present surface. The fill is composed of dense root mix within a clayish brown soil matrix enclosing some shells. Fragments of a blue glass bottle of unknown age has also been recovered. The 35cm high square basis bloc has definite remains of coral growth on its lower half face. This indicates that at one stage in the past the basis of the wall was exposed to the ocean at all times, allowing coral to fix. The coarse sand matrix on which the wall was built encloses numerous shells.

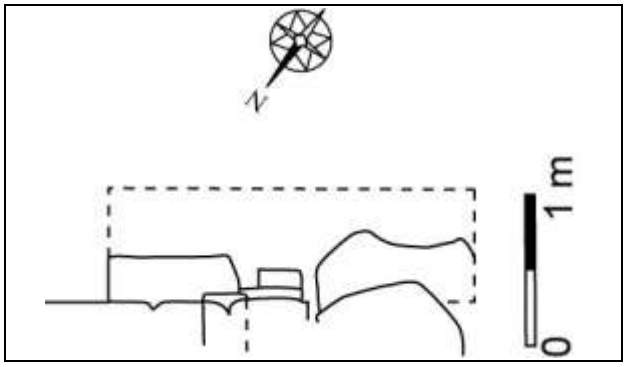


Figure 29. Top view of excavation 7, showing the outward movement of the two largestones of the lower row.

Figure 30. Excavation 7 at the end of the dig, showing the buried cornerstone and the crack in the large top-stone (left of double-meter).

The main result of this test-pit has been to demonstrate that the foundation of the wall was only about 85cm below the calculated low tide (the dried mangrove flat in the vicinity) (fig. 31). The lowest row of the southern corner of platform 110 was built with large rocks, exceeding 100cm of length. But clearly, these served mainly as the basis for the massive boulders of the second tear. The total height of this portion of wall was at least 320cm. After building, the wall was exposed during enough time to the open sea, for coral to fix on the lowest stones (see fig. 48). The presence of fragments of a blue glass bottle (with number 6 or 9 printed in the bottom) close to the bottom of the fill (fig. 32), may indicate regular shifting sedimentation and erosion of the sand cays along these exposed outer walls facing the Ocean.

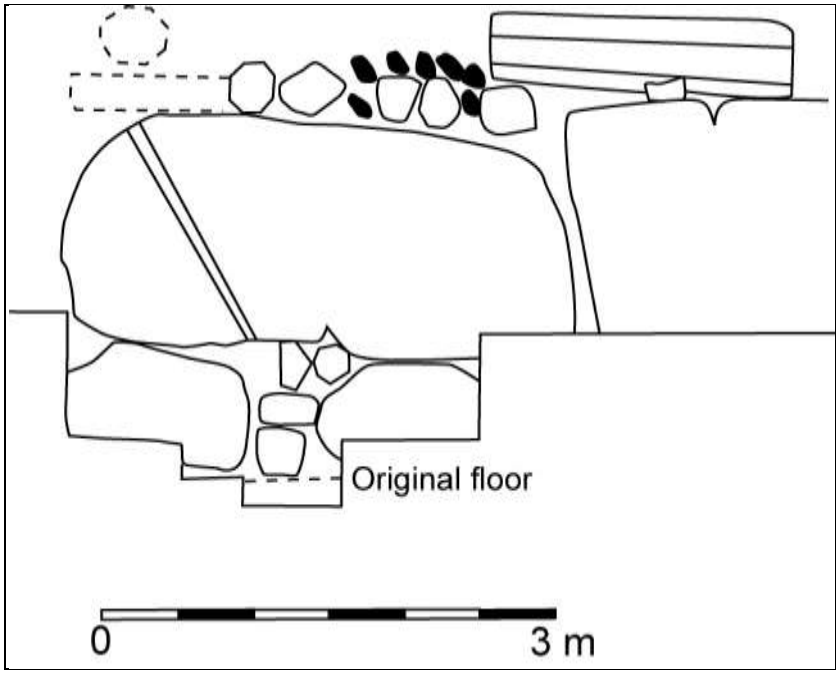


Figure 31. Front view of the corner of platform 110 of excavation pit 7.

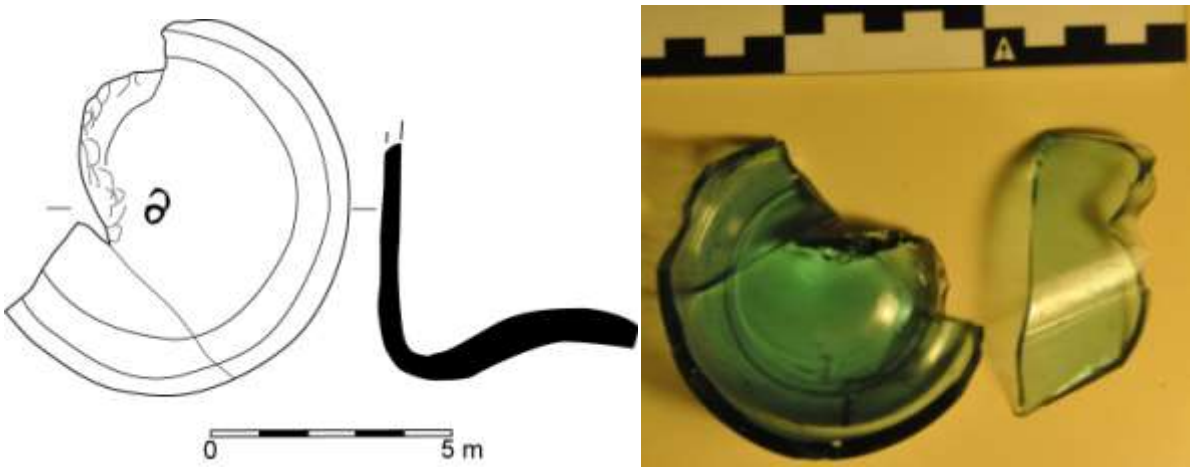


Figure 32. Blue bottle fragments found in the root/soil matrix near the bottom of the fill of excavation 7.

Figure 33. End of excavation 8 along the north-west wall of Peinkitel platform 55, close to the northern corner. The partly buried basis of the lowest monolith is clearly visible.

Excavation 8

This test-pit was positioned 50cm from the northern corner of platform 55 (Peinkitel), on land, along the wall facing Temwen Island. The scope of the excavation was to test the hypothesis of significant erosion from the Island into Nan Madol, which would account for the silting of the site. The 60cm by 60cm pit was positioned along the north-western wall and was excavated in 10cm deep artificial spits (fig. 33). The following observations were made during the excavation (fig. 34):

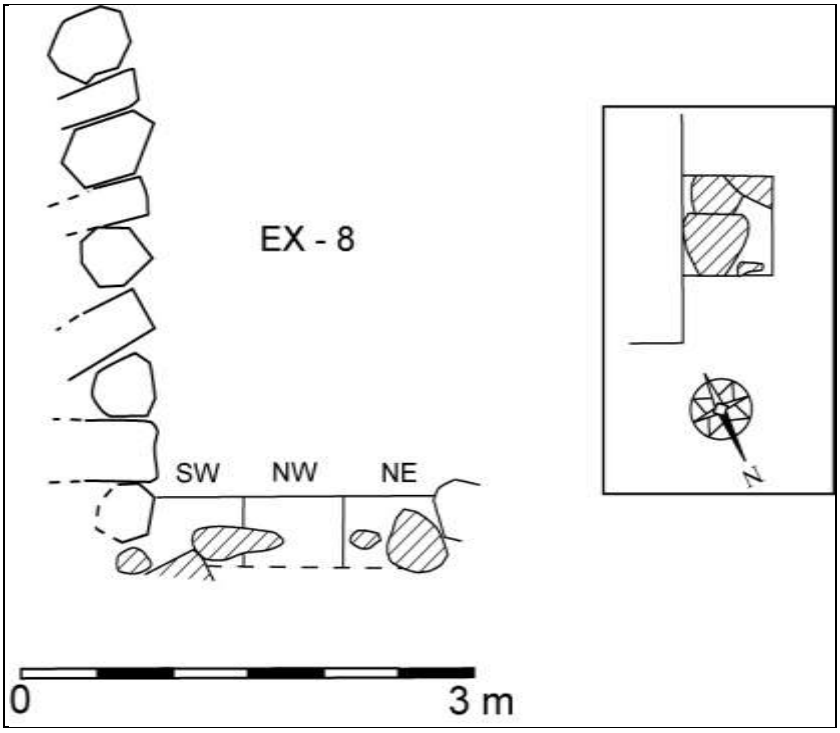


Figure 34. Profile of excavation 8 and position of the different natural blocks identified in the test-pit.

| | |
|---|---|
| Less that 4cm | 7 |
| Between 4cm and 7cm | 22 |
| Between 7cm and 10cm | 20 |
| More than 10cm | 5 |

Table 2. Diversity of size of the stones/pebbles found in spit 0-10cm of excavation 8.

- 0-10cm. Brown clay matrix enclosing numerous stone pebbles of different sizes. Only one small coral slab was identified, at 10cm deep, placed in a flat position. In table 2 are given the sizes and numbers of stones/pebbles for the first 10cm.
- 10-20cm. Same brown clay matrix, with more stone pebbles, which account for nearly half of the fill. Appearance of a large boulder in the eastern corner of the pit, extending both sides over about 20cm.
- 20-30cm. Same matrix with pebbles. The boulder in the eastern corner expands and another boulder appears in the western corner.

- 30-35cm. Same brown clay matrix but with significantly less pebbles. A third boulder appears in the south-western profile. The basis of the wall's large lower polygonal column was reached at 35cm.
- 35-40cm. The brown clay matrix is of finer texture and with little presence of pebbles. A stone bloc appears under the basis of the wall, but without being in contact with the column. A charcoal was present at 40cm, under the wall, and was sampled for possible dating.
- 40-45cm. The three main blocs continue to expand without indicating the presence of their base. They appear to be natural formations. No other stone has been identified under the wall. The soft soil with few pebbles form the matrix around them. The excavation was stopped at 45cm deep.

The main conclusion that can be gained from this small test-pit is that there does not appear to be any sign of significant erosion from the slopes of Temwen Island along the north-west wall of Peinkitel platform. The basis of the outer wall is about 25-30cm below the present-day surface, a depth that can mainly be accounted for by the weight of the wall, over 3m high.

Figure 35. View of the coral fill underneath the lowest row of stones of the wall separating platforms 103 and 104.

Excavation 9

A test-pit was positioned at about 3 meters of the south-east corner of the retaining wall of platform 104 (Usendau), the excavation being done in the fill of platform 103 (Pahseid). Platform 103 has been interpreted in some studies as an adding to the older platform 104, and it was though hoped that the original southern retaining wall could be followed along the fill. After removal of the upper stratum of small coral pebbles, it appeared that the lower polygonal boulders were in fact the basis of the retaining wall (fig. 35). These had been positioned on a fill of small and large coral boulders, some exceeding 50cm in

diameter (fig. 36). It is though difficult to demonstrate that the two platforms were built at different times. If this was indeed the case, this excavation indicates that the former retaining wall was removed, possibly to use the stones elsewhere.

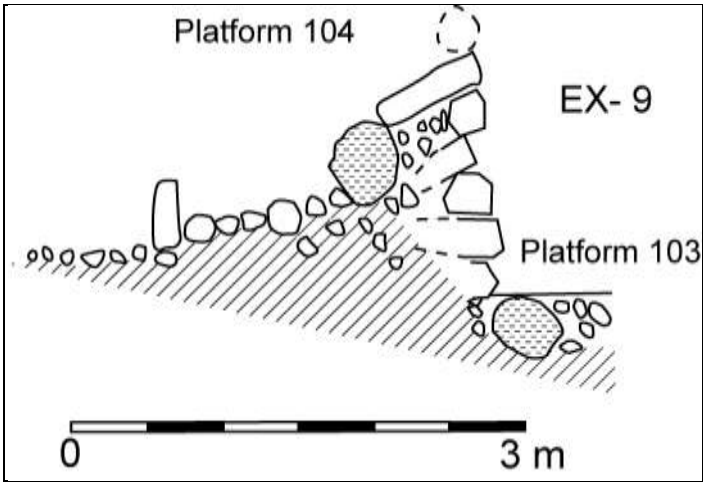


Figure 36. Schematic profile of the outer wall of platform 104 and excavation 9 on platform 103, illustrating the absence of downwards building of the wall.

Excavation 10

In order to confirm the absence of a buried wall facing the south-western limit of platform 104, a test-pit about 150cm by 100cm was dug at the south-east corner. The retaining wall of platform 103 facing the main channel is today collapsed. The removal of the partly eroded coral fill, incorporating some massive coral blocks, confirmed the result of excavation 9, with the absence of a stone facing after the first set of boulders forming the south-east angle of platform 104 (fig. 37). A slight difference of about 15cm was identified between the alignment of the south-eastern facing wall of platforms 104 and 103.

Figure 37. Excavation 10 in progress, showing the boundary between the wall construction and the coral fill in the lower tires of the wall separating platforms 103 and 104. Note the size of the large coral blocs used for the main fill.

Excavation 11

A test-pit was positioned along the south-eastern outer wall of platform 104, with the scope to identify possible slabs under the present fill of the main channel. A first row of polygonal blocks about 25cm thick and running perpendicularly to the wall face, was identified just under the surface (fig. 38). They rest on a large polygonal block, whose basis could not be reached due to tide rise. The excavation was stopped at about 45cm deep, but it can be expected that at least one other row of stones is present as the wall's basement (fig. 39). The sand fill was rich in shells and stone pebbles.

Figure 38. Excavation 11 at rising tide. The lower row of polygonal stones of the southern corner of the retaining wall of platform 104 (facing the main channel) is visible in the water.

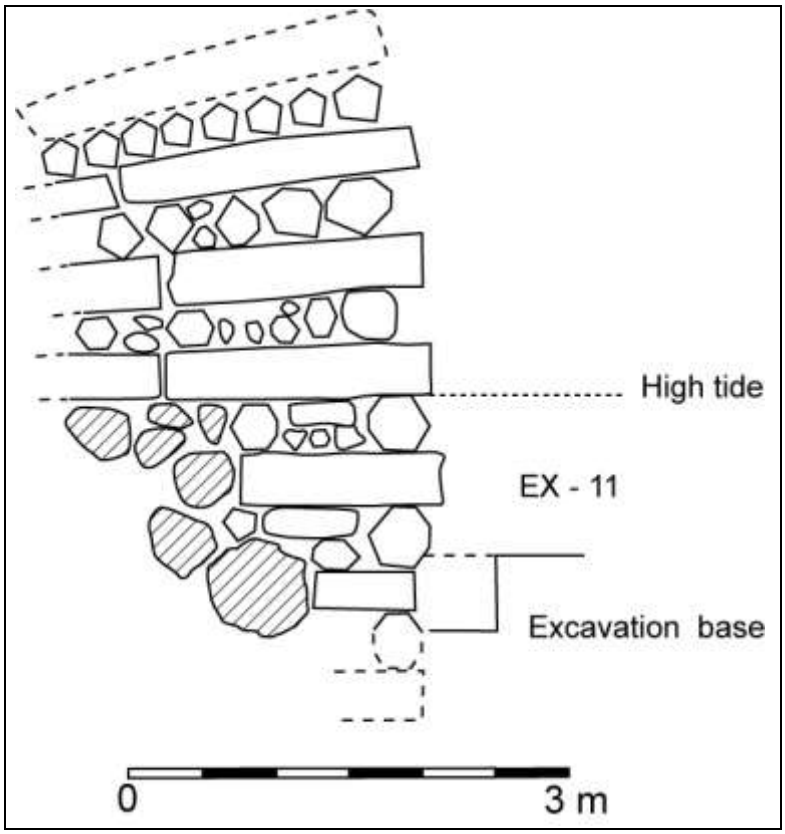


Figure 39. Schematic profile of excavation 11, showing the possible depth of the wall of platform 104 facing the main channel.

Excavation 12

A small test-pit was positioned along the south-western face of the retaining wall of platform 129 (Lemenkau), facing the “blue hole” in between two of the south-eastern protective wall platform of Nan Madol (fig. 40). The presence of coral growth visible on the outer surface of the lower stones allows to calculate that the basis of this wall is about 50cm under the lowest tide mark, resting directly on the sand fill.

Figure 40. View of the wall area of platform 129 where excavation 12 was positioned.

# IV. Analysis of the main results

The cores and test-pits made on different platforms and channels of Nan Madol in early 2018, had as main objective to recover information about the possible depth of the retaining walls and the archaeological characteristics of the channel's fills. This appeared needed in relation to the demand by UNESCO to consider the option of dredging some of the channels to ease touristic visits. Long-term restoration issues and refitting of some of the retaining walls are also dependent on the potential depth of buried wall-profiles.

Previous information on the topic

This part does not intend to review all the publications that have discussed the possible depth of the channels, but to highlight some of the main information available aside from the 2018 test-pits. Since the first European descriptions of Nan Madol, questions around the building techniques used to raise the platforms have been one of the central themes debated. Some of the early authors envisioned a progressive subsidence of the Island, some hypothesizing a process of Island subsidence: "It is also clear that when the latter (constructions) were raised, the islet on which they stand was in a different condition from what it now is. For at present they are actually in the water; what were once paths are now passages for canoes" (from Dana 1872, in Kubary 1874: 125). But most observers agreed that the site had been purposefully built on water, by accumulating stones and coral on the reefs' surface. In a general profile of a standard platform published by Kubary (1874, fig. 2), the lowest monolith of the retaining wall is though illustrated as being under the low tide mark (*Ebbe* in German) and covered by sediment. This may be an indication that Kubary did some excavations in the channels, the fill being less than 100cm thick if the trapezoidal blocks are each about 45cm in diameter. A different pattern is observable in his schematic profile of Nan Dawas (Kubary 1874, fig. 3), with the basal blocs of the retaining wall of the platform drawn as being placed directly on the original sand floor level (fig. 42).

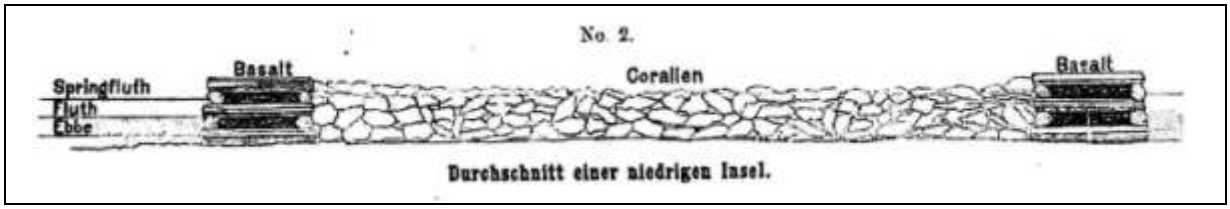


Figure 41. Profile of a low platform of Nan Madol published in Kubary's paper of 1874.


Figure 42. Schematic profile of Nan Dawas, illustrating the basis of the retaining wall placed directly on the original sand floor.

In the publication of the German *Südsee Expedition*, P. Hambruch (1936) sketched a series of profiles, drawing platforms basis resting on the reef, understood as being the soil stratum visible during historical times (fig. 43). Japanese archaeologists excavated at Nan Madol between the two World Wars (ex: Yawata 1932; Muranushi 1942), but their publications have not been assessed for the present study and it is not known if they published profiles of the site's platforms.

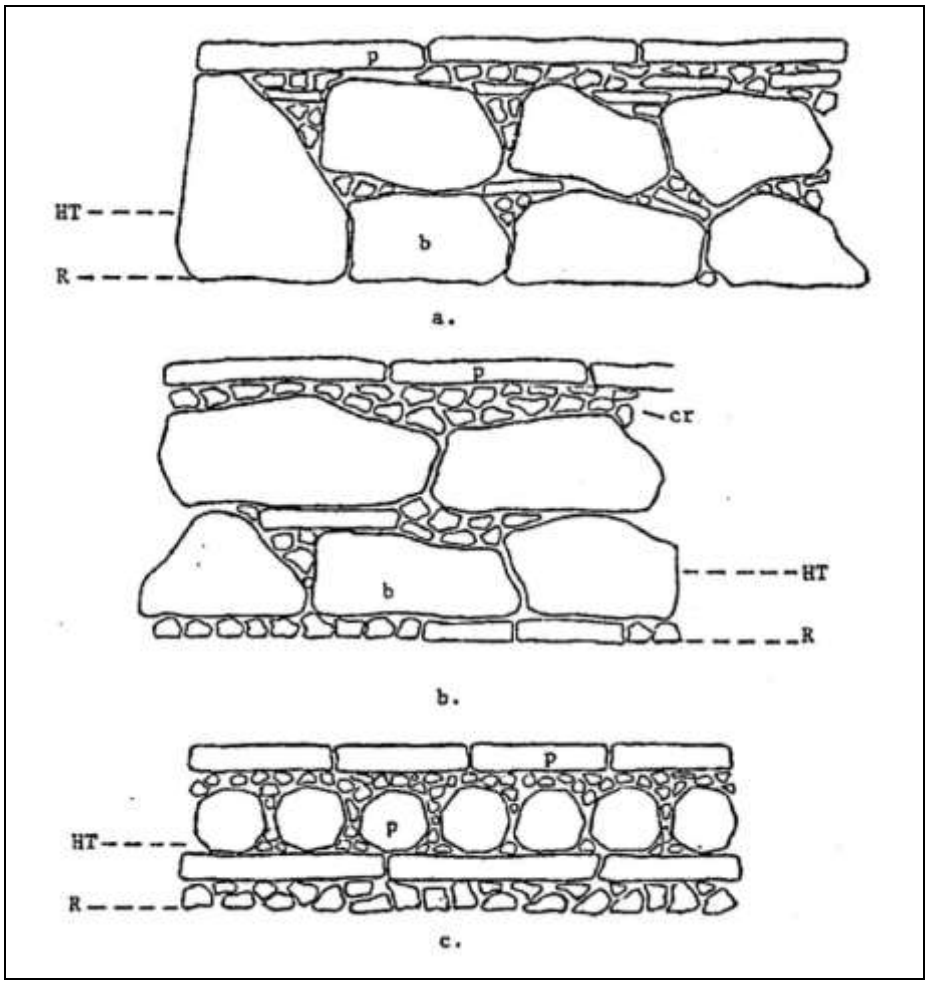


Figure 43. Example of schematic profiles published by P. Hambruch (1936, p. 15-16, in Ayres et al. 1983), showing (HT) high tide height and (R) the estimated reef surface.

When turning to the different archaeological reports published about Nan Madol since the 1970s, the only mention of an excavation fulfilled along an outer wall that was identified, is by the team of W. Ayres (1985). The excavation opened between the platforms of Pahnwi 1 and 2 "penetrated through sand and coral rubble, mangrove (?) beach mud, and finally to the original preconstruction coral reef flat at the depth of 1.2m beneath the surface of the accumulated deposit" (Ayres 1985: 23 and fig. 8) (fig. 44). The sandy area of Pahnwi being dry at low tide, it can be inferred that the wall basis is probably less that 100cm under the low tide level.

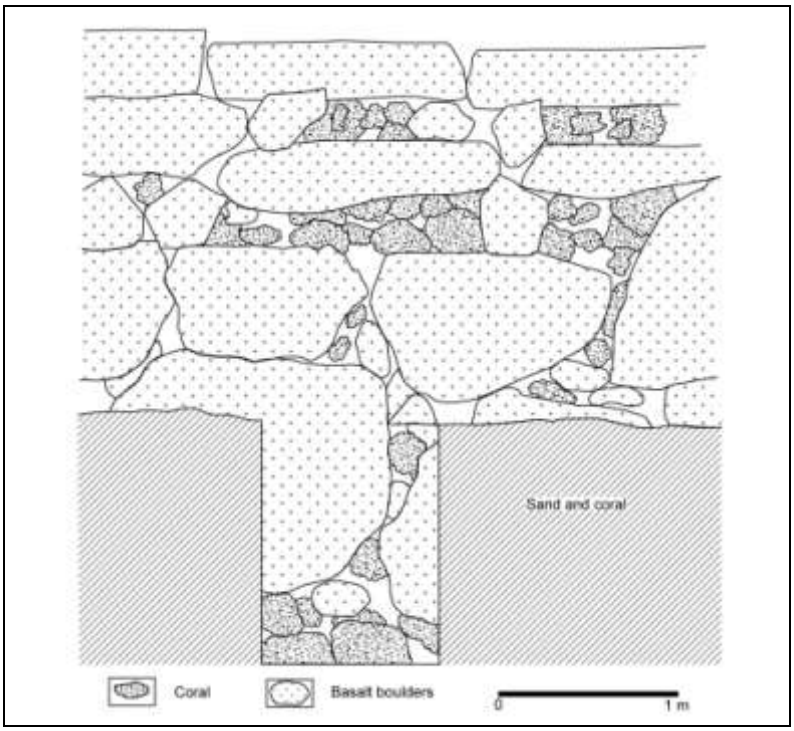


Figure 44. Profile of the excavation between Pahnwi 1 and 2, showing the basis of the outer wall of the platform at the bottom of the excavation pit (redrawn from Ayres 1985, fig. 8).

All the other data related to the actual depth of the wall's basis, appear to be of a general character. A profile of the massive outer seawall of Nanmwoluhsei (entrance passage), shows a "mean tide level" about 2m above the basis of the wall (Ayres 1993, fig. 12). In a stratigraphic correlation table for excavations fulfilled on the large platform 33 of Pahnkedira, the original reef is tentatively positioned about 50cm below the "outer base of the Pahn Kedira islet wall" (Ayres et al. 1983, fig. 34) (fig. 45).

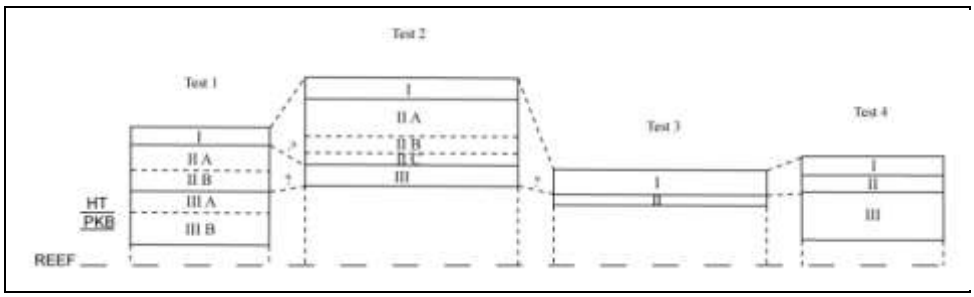


Figure 45. Stratigraphic correlation table for 4 excavation on Pankedira platform 33, with the following labels: "HT marks the high tide mark; PKB notes the outer base of the Pahn Kadira islet wall; and Reef designates the estimated level of the original, pre-construction coral reef flat" (Ayres et al. 1983, p. 127. Redrawn from the original figure).

Dr Osamu Kataoka from Kansai Gaidai University in Japan, has kindly forwarded to C. Sand his unpublished excavation profiles from test-pits opened in 2015 on Dau platform 111 and on Kohnderek platform 117. On Dau, these reached a depth of about 150cm (test-pit 1) and 125cm (test-pit 6, with an alignment of polygonal boulders in the bottom fill) before hitting the original sandy bottom. On Kohnderek the excavation reached 150cm deep (test-pit 2) before the sand (Dr Osamu Kataoka, personal communication, March 2018).

In conclusion, it can be assessed that early observations as well as the few archaeological excavations fulfilled to assess the depth of the platforms of Nan Madol, indicate that these are probably mostly built on an original sandy lagoon surface less than one meter below the lean low tide.

The fill of the channels

The very limited time at disposal during the January 2018 mission to work on the channels' depth, did only allow to get 7 usable profiles. Two clearly different sediment fills have been identified and will be discussed separately. They are described here without any further sedimentological study of the sediments, as these and the cultural remains retrieved during the excavations, have been left in storage at the *Historic Preservation Office* Pohnpei. Consequently, no dating of samples is presented in the present report.

Figure 46. The sandy sediment observable at the bottom of core EX. 3, at about 180cm deep.

1. *The mangrove areas towards Temwen Island*

The first type of fill, characterized mainly by terrestrial mud, was spatially restricted to the channels positioned near the island of Temwen. Auger coring allowed to record discrete sediment differences according to depth, a clear indication of successive episodes of sedimentation over time. The only core that reached a clear sandy substrate was excavation EX-3, at about 180cm deep (fig. 46). This was covered by mixed mud/sand/shell fills. Even if differences in the mud composition were also observed in excavations EX. 2 and EX. 5, the amount of stone pebbles did not allow to reach beyond 80cm and 130cm in these two cases. The concentration of hard elements was so important in the small channel of EX. 4 (between platforms 84 and 98/99) that the auger did not manage to get further than a few tens of centimeters. The differences observed in the amount of intrusive elements in the sediment cores, might be explained by differences in the tidal water flow regime between large and wide channels like EX. 3 and a narrow channel of EX. 4. The significant water flow in the

main channels would have regularly washed away the stones and shells purposefully thrown or naturally collapsed in the water, while these would have been trapped more easily in the small lateral channels. Accordingly, the fact that sand was identified at 180cm deep in EX. 3, does not imply that the original channels were that deep when the first platforms were built. Waiting for possible dating of some of the C14 samples collected, it can be hypothesized that there had been accumulation of inland sediments around the shores of Temwen Island since first human settlement, if not before. Consequently, the lower portion of the retaining walls of the platforms built in the north-western area of Nan Madol (towards Temwen Island, where high mangrove grows today), might not necessarily be buried so deep in the mud fill.

The silt/soil sediments that form the fill of the north-western side of the site appear to be mainly issued from the biological decomposition of vegetation and from erosion of surface sediments originating from Temwen Island. Although the auger-cores have shown a significant depth of the soil mud fill before reaching sand in some areas, it must be highlighted that off the southern side of Painkitel platform 55, the sand substratum can be observed in the present-day path used by the fishermen through the mangrove, covered by only a thin layer of muddy sediment. A similar observation has been made in the channel facing platform 93 (Dapahu), where at low tide the summit of the mud sediment holding the mangrove trees is dry, while in the narrow navigable passage the water level is still about 50cm deep, with a sandy bottom (fig. 47). These observations highlight the probable stratigraphic complexity of this part of the site.

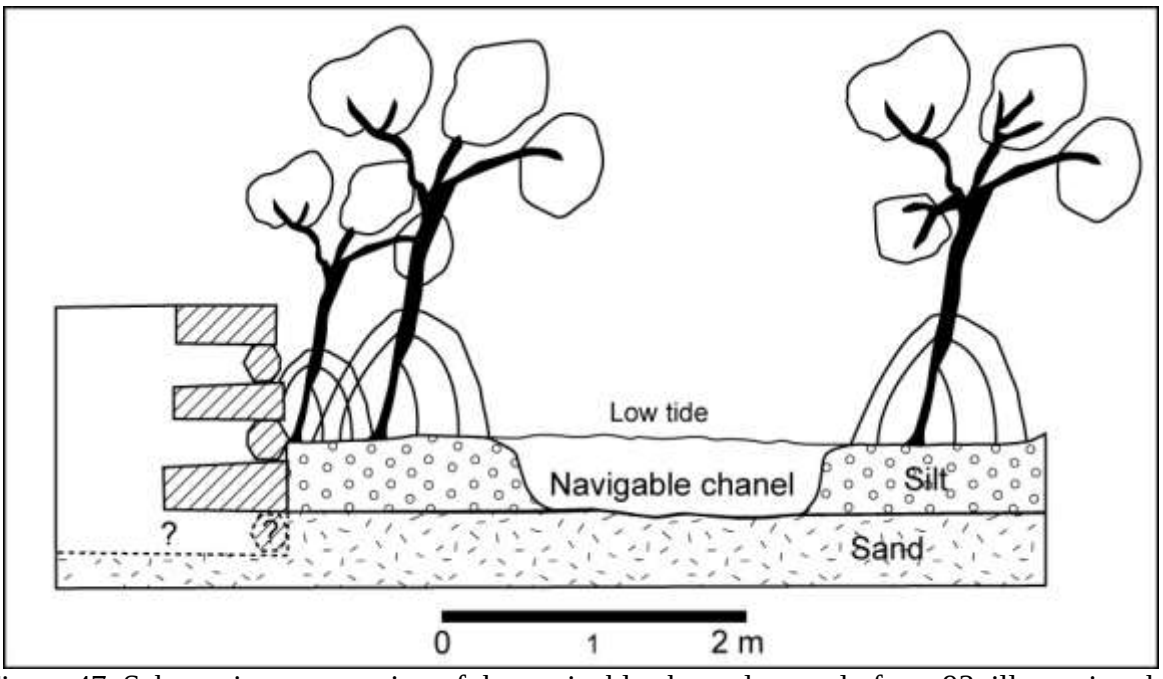


Figure 47. Schematic cross-section of the navigable channel near platform 93, illustrating the stratigraphic separation between the upper silt fill associated to mangrove growth, and the underlying sand layer.

*2. The sand fill*

A completely different stratigraphy has been uncovered in the north-eastern part of Nan Madol, where the channels' fill is mainly composed of sand. Excavations EX. 6 and EX. 11 have uncovered a large amount of remains in this sand, with natural and eaten shells, stone pebbles and flakes of different sizes (mainly burn oven stones), coral, and an array of other archaeological remains like bones and worked shell. It is though understandable that the auger

did not manage to work properly when used in excavation EX. 1. Only two excavations allowed dig up to over 100cm deep, without reaching for EX. 6 the basis of the vertical polygonal boulders. This excavation also allowed to identify discrete variations in the fill, with three stratigraphic units mainly defined by the differential amount of stone pebbles and the coarseness of the sand. The presence of a superficial whitish crust on the stones of layers 2 and 3, as well as the decay of the shell surfaces in those same layers, is testimony of a long stay in water. This may signal a significant time-difference between the formation of the lower layers and the deposit of the upper layer.

A different setting was observed for excavation EX. 7, along one of the outer protective walls to the south of Nan Dawas (platform 110). The upper fill was mainly of white sand without any significant amount of other remains aside from some large blocks of coral that had eroded out from the wall. The compact roots/soil layer indentified underneath, which enclosed a blue grass bottle basis, was tentatively interpreted as a former mangrove formation. The basis of the wall was reached at about 100cm deep, positioned on a coarse sand layer with crushed shells. At mean low tide during construction, the top of the lowest row of basalt blocks would though have been over water. In this excavation EX. 7 as well as in excavation EX. 12, the lower part of the blocks preserve the remains of coral growth (fig. 48), indicating that after construction the stones where in open water for a long time. The sand cover was though part of a later formation process and the dating of coral samples from the basis of EX. 7 might in the future give some chronological background to this. This data highlight the significant natural process involved in the progressive deposition of sand in the channels over the centuries, mixed with eroding coral fragments from the platforms fill and refuse (burnt cooking pebbles, shells, broken items) thrown into the channels by the site's inhabitants when Nan Madol was occupied. The fill has been constantly reworked and mixed by crab activity, without nevertheless leading to a complete disappearance of stratigraphic differences between layers, as has been identified in excavation EX. 6.

Figure 48. Fossil coral growth on the lowest stone row of the outer wall of platform 110 (excavation 7).

Figure 49. The north-eastern wall of Peinkitel platform 55, showing the tilting of the wall into the marshy soil at the edge between dry and wet land.

*3. The walls built on land*

The only excavation done on land was at the corner of platform 55 (Peinkitel). Excavation EX. 8 showed that the basis of the wall was only about 30cm below the present surface, demonstrating low post-construction sedimentation of that area. This result allows to question the hypothesis of a significant recent silting of the channels of Nan Madol due to recent renewed land erosion. Platform 55, considered one of the oldest large structures of the site, is standing today partly on land and partly in the mangrove mud. If there had been significant erosion of sediments from inland and deposition in the near-shore sea, this would have expanded the coastal flat over time. Looking at the north-eastern wall, there appears to have been an opposite process, as on the edge between dry land and mud, the outer wall shows a binding (fig. 49) that clearly occurred after its construction on harder ground. This subsidence appears to characterize more the erosion of a former coastal flat than its progradation. The Peinkitel case strengthens the hypothesis of possible sea-level fluctuations during the last two millennia of Pohnpei's history, the significant tilting of the wall alignment being best explained by a partial erosion of the shore, possibly at a period of higher sea-stand. A detailed study of the different parts of the walls of Painkitel would probably allow to find clues to strengthen or invalidate this hypothesis. As a first element, the absence of significant recent silting can be highlighted by the observation of the inner face of the south-eastern wall of platform 55, which shows that the stone masonry of long basalt blocks was built directly on a surface of coral boulders of different sizes (fig. 50).

In conclusion, the archaeological study on this western limit of Nan Madol, located partly on land, does not confirm any recent significant soil erosion arising from the slopes of Temwen Island. It raises on the contrary the possibility of coastal erosion that could have

been due to a small higher sea-stand sometime after the construction of Peinkitel, or to natural coastal erosion due to the cleaning of protective mangrove when the platforms of Nan Madol were built and the channels used as navigation ways on an everyday basis.

Figure 50. Inner side of the southeastern wall of Peinkitel platform 55, showing the lowest row of polygonal columns placed on a fill of coral boulders.

# Conclusion

The 6 days archaeological field mission fulfilled between end January and early February 2018 on the site of Nan Madol was specifically targeted to gain information on the fill of the channels and on the possible depth of the retaining walls of the platforms. Three main results can be highlighted in conclusion:

- The first result concerns the depth of the channels, which appear at present to be variable, with deep stratigraphies identified in the north-western swampy part of Nan Madol, near Temwen Island, opening up the hypothesis of a significant artificial height of some of the platforms' wall facing. Elsewhere, as well as in the sandy areas of the site, fills may not extend much over 1m in thickness over the low tide, if not less.
- The second result highlights that the channels fill is an archaeological component. The sand and the clay matrix enclose burnt stones, shells, bones, archaeological items like adzes and shell beads. Any cleaning of the channels will though have to include an archaeological dig.
- All the test-pits have confirmed that the channels fill is mainly a pre-historical sedimentary formation. Apart from the outer fill of excavation EX. 7, nowhere could be observed a recent development of an upper sedimentary layer associated to a change in water circulation. The site's channels do not appear to have been affected by the construction of Temwen's bridge. Nonetheless, recent cloaking of parts of the main channels by mangrove growth has evidently led to higher surface siltation between the roots. This has also been the case in the channels where bridges have been built in recent time to allow easier tourist access.

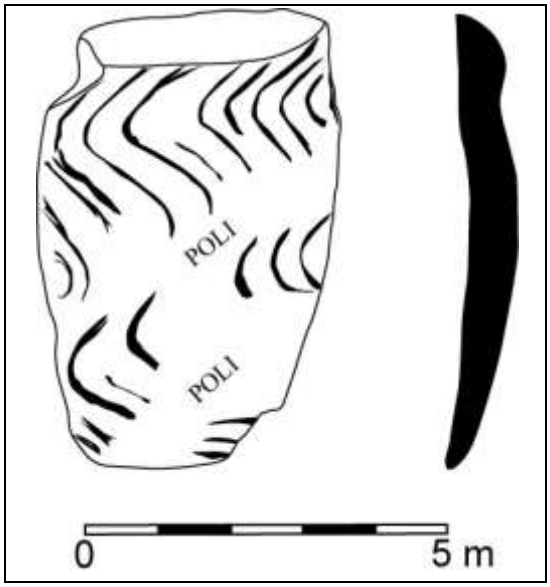


Figure 51. Small tridacna shell adze collected on the surface of the path on platform 99 during the January 2018 field-work.

In conclusion of this study, it can be highlighted that the demonstration of the presence of a significant amount of archaeological remains in the channels filled with sand, has interesting potential for a more complete study of the site and understanding of the different phases of its occupation. Any large-scale excavations will have to secure significant funding and heavy equipment. In the mean time, the January 2018 fieldwork has highlighted the fact that the large amount of remains trapped in the sand fill (fig. 51), prevents the fine sediments to erode severely in the excavation pits during high tide. This means that it should be possible to run a second stage of test-excavations in the future. The opening of larger test-pits (2m by 2m), to be excavated at low tide, would allow to confirm the preliminary conclusions presented here and reach the basis of some of the retaining walls of the platforms of Nan Madol, without necessitating massive sediment removal though a high cost excavation program.

## Acknowledgments

The field mission of Christophe Sand (Institute of Archaeology of New Caledonia and the Pacific-IANCP) has been made possibly through a grant (*Intergovernmental Body Allocation Contract*) allocated by UNESCO to FSM Office of National Archives, Culture and Historic Preservation, Federated States of Micronesia. Application for the Grant was made by Mister Augustine Kohler, FSM National Historic Preservation Officer at the Office of the National Archives, Culture, and Historic Preservation (NACH) of the Federated States of Micronesia. C. Sand would like to thank deeply Mr Kohler for his invaluable help, assistance and attention during his stay and for organizing with great efficiency the Reactive Monitoring Mission of UNESCO-ICOMOS in January 2018. The team would also like to acknowledge the help and input of the staff of the Historic Preservation Office (HPO) in Pohnpei. Thank you to Dr Mauricio Ruffino for sharing his deep knowledge of the site and of the history of archaeology in Nan Madol, and to Takuya Nagaoka (NGO Pasifika Renaissance) for his support. Thank you to Pr. John Peterson for forwarding the Smithsonian Institution photographic collection, to Pr. William Ayres for the information sent about platform cleaning and channel excavations, and to Dr. Osamu Kataoka for sharing his excavation data from Nan Madol. We would like to thank the Forestry Department for allowing HPO-Pohnpei to borrow the coring device. All our gratitude goes to the Nanmwarki (fig. 52) and the local community for their agreement to allow this team to fulfill the work. We hope they will be pleased with the outcome.

This report was written by C. Sand, the computer drawings being done by David Baret (IANCP). C. Sand's mission was agreed by the Board of the Institute of Archaeology of New Caledonia and the Pacific, as part of the 2017 regional program of IANCP for the New Caledonian Government.

Figure 52. Meeting of the Reactive Monitoring Mission of UNESCO with the Nanmwarki in January 2018.

# Reference List

Ayres, W. 1985. Micronesian Prehistory: Research on Pohnpei, Eastern Caroline Islands. In V.N. Misra and P. Bellwood (eds), *Recent Advances in Indo-Pacific Prehistory*, pp. 399-409. New Delhi: Oxford and IBH.

Ayres, W. 1993. Nan Madol Archaeological Fieldwork. Final Report. Eugene: University of Oregon.

Ayres, W., A. Haun and R. Mauricio, 1983. *Nan Madol Archaeology : 1981 Survey and Excavations*. Guam: Pacific Studies Institute for the Historic Preservation Office of Saipan.

Ayres, W., K. Seikel and M. Levin, 2008. *Archaeological Remains at Angier-Karian, Nan Madol, and Supplement Studies at Sokehs and Temwen, Pohnpei, Federated States of Micronesia*. Eugene: University of Oregon Report.

Ayres, W., M. Levin and K. Seikel, 2015. *The archaeology of Nan Madol and Temwen Island, Pohnpei*. Eugene: University of Oregon Report.

Hambruch, P. 1936. *Ponape*. In G. Thilenius (ed.), *Ergebnisse der Südsee Expedition, 1908-1910*, Vol. 3. Hamburg: Friederichsen, De Gruyter.

Kataoka, O., T. Nagaoka and T. Ishimura (eds), 2017. *Survey Report on the Preservation Status of the Megalithic Complex of Nan Madol and Sites on Temwen Island. Pohnpei, Federated States of Micronesia*. Private Publication.

Muranushi, I. 1942. Brief Account of Human Remains on Ponape and Relics of Nanmatal. *Kagaku Nanyo* 4(3): 218-225. (in Japanese)

Nagaoka, T. 2017. Nan Madol from the Perspective of Archaeology and Oral Tradition. In O. Kataoka, T. Nagaoka and T. Ishimura (eds), *Survey Report on the Preservation Status of the Megalithic Complex of Nan Madol and Sites on Temwen Island. Pohnpei, Federated States of Micronesia*, pp. 94-101. Private Publication.

Saxe, A. 1980. *The Nan Madol Area of Ponape: researches into bounding and stabilizing an ancient administrative center*. Saipan: Historic Preservation Office Report.

Sand, C. 2018. *Vegetation cover of Nan Madol World Heritage Property: a preliminary assessment of its history*. Nouméa: Institute of Archaeology of New Caledonia and the Pacific Report.

Yawata, I. 1932. On the Megalithic Structures of Kusaie and Ponape. *Chigaku Hyoron* 8(4): 310-326. (in Japanese)

# APPENDIX I

## *Photographic record of the archaeological material from excavation 6*

Figure A. Archaeological material from spit 0-35cm.

Figure B. Archaeological material from spit 35-55cm.

Figure C. Archaeological material from spit 55-80cm.

Figure D. Archaeological material from spit 80-100cm.

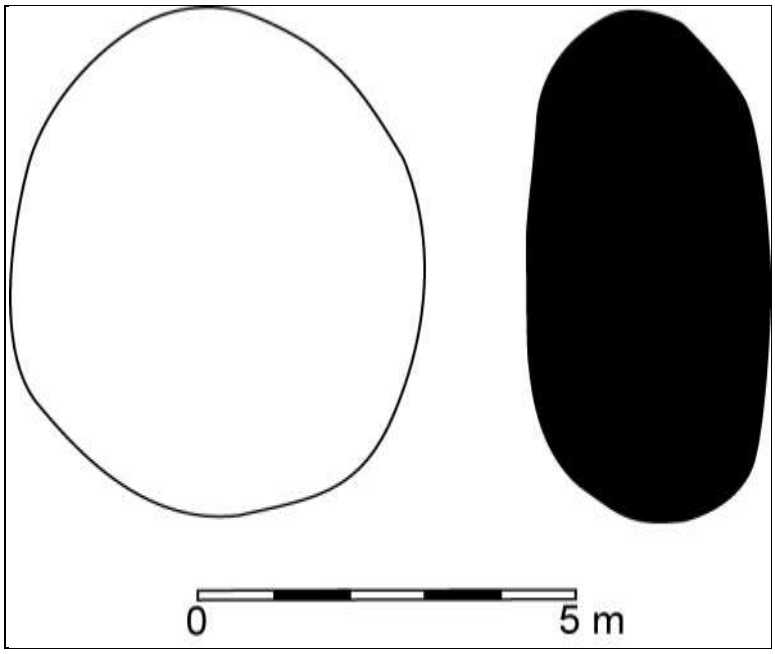


Figure E. Heavy pebble, possibly used as a hammer-stone.